JUSTIME SINCE 1976

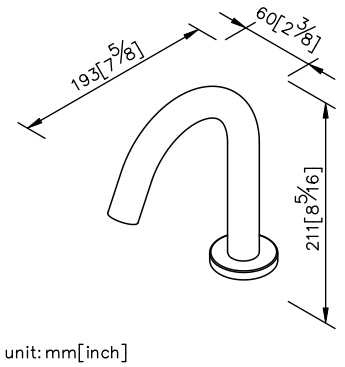

Sensor Basin Faucet (Cold Only)(DC)

6797-S0-80CP
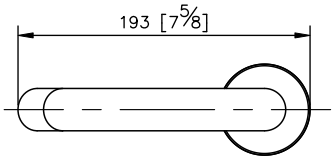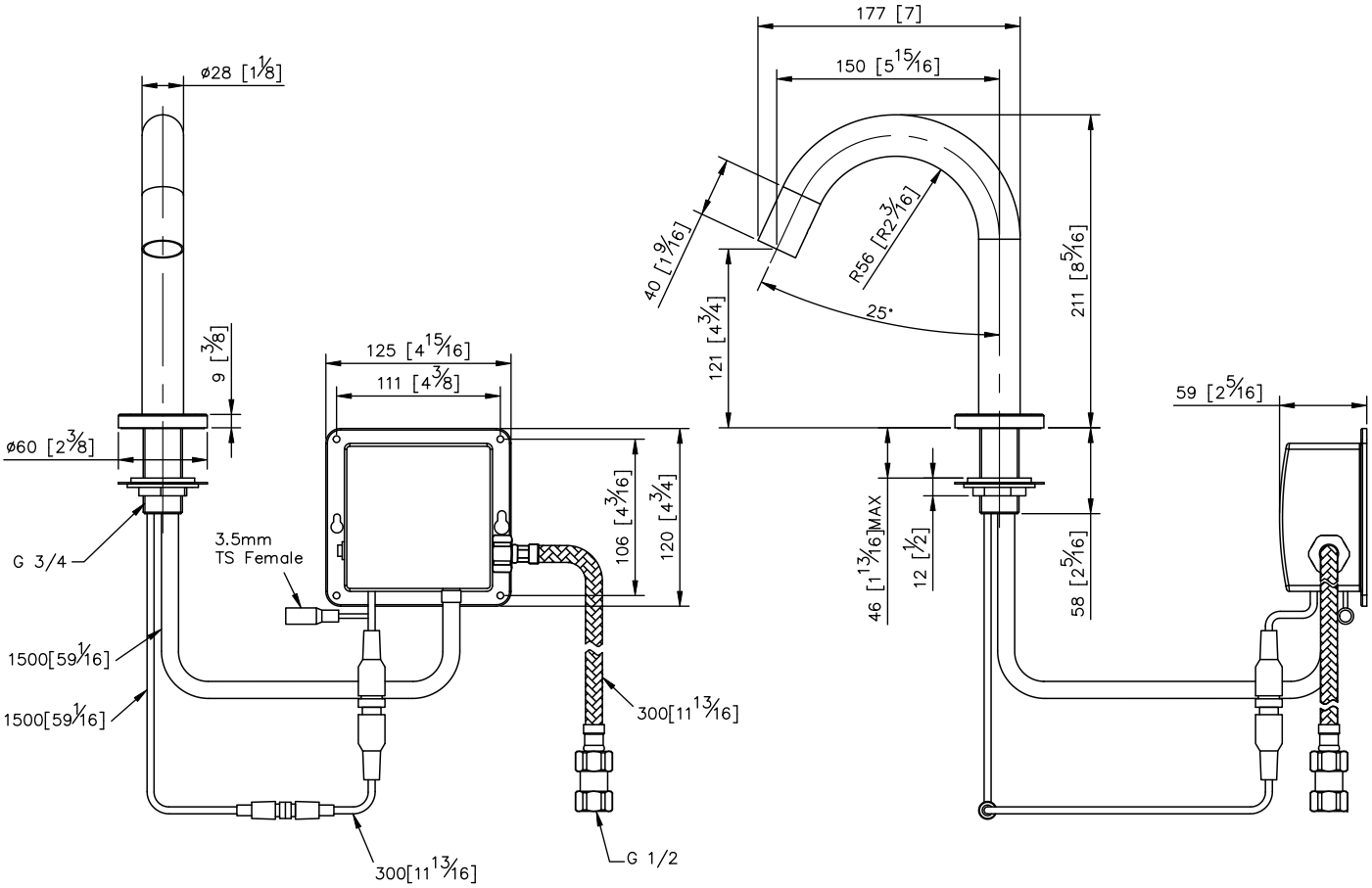
1.Infrared Sensor Automatic Detection
2.Safety Guard: Valve off if water flowing over 60sec.
3.Automatically detect the environment, adjust the sensor, and have anti-interference function.
4.Inner filter prevent the bloackage of sensor valve.
5.Power Source: Alkaline Battery AA x 4, DC6V(1.5V x 4)
6.Battery life test: about 300,000 alkaline batteries; about 100,000 carbon zinc batteries.
7.Flush Mode: Water start flowing if valid sening around 0.5sec~1.0sec
8.Low power prompt: When battery power is low, red indicator light will be flashed for prompting battery replacement.
9.The faucet valve can stand the presure from 0.5 to 6 kgf/cm^2