INSTALLATION INSTRUCTIONS

6891安裝說明

1. Use **Bracket** as template to locate appropriate drilling centers with pencil.
   使用固定鐵片和鉛筆在預定鑽孔的位置,畫上記號.

2. Use 6mm drilling bit to drill holes in your marked locations, when mounting on drywall, insert **Plastic Anchors**.
   當安裝在水泥牆,使用1/4英吋鑽頭,鑽孔深度4公分,崁入塑膠塞並使之齊平於牆面.

3. Attach **Bracket** to wall with **Wall Screws**.
   將固定鐵片以螺絲鎖在牆面上.

4. Locate the **Main Part** on the **Bracket** and secure with **Set Screw** .
   在固定鐵片上面掛住產品本體,並以螺絲起子由下方鎖緊埋頭螺絲,完成安裝程序.

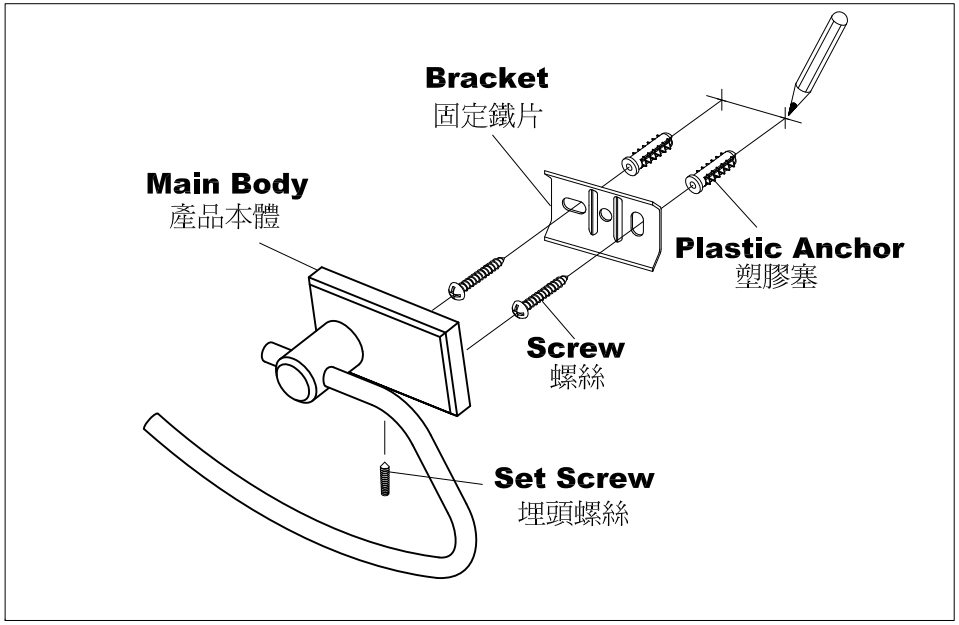
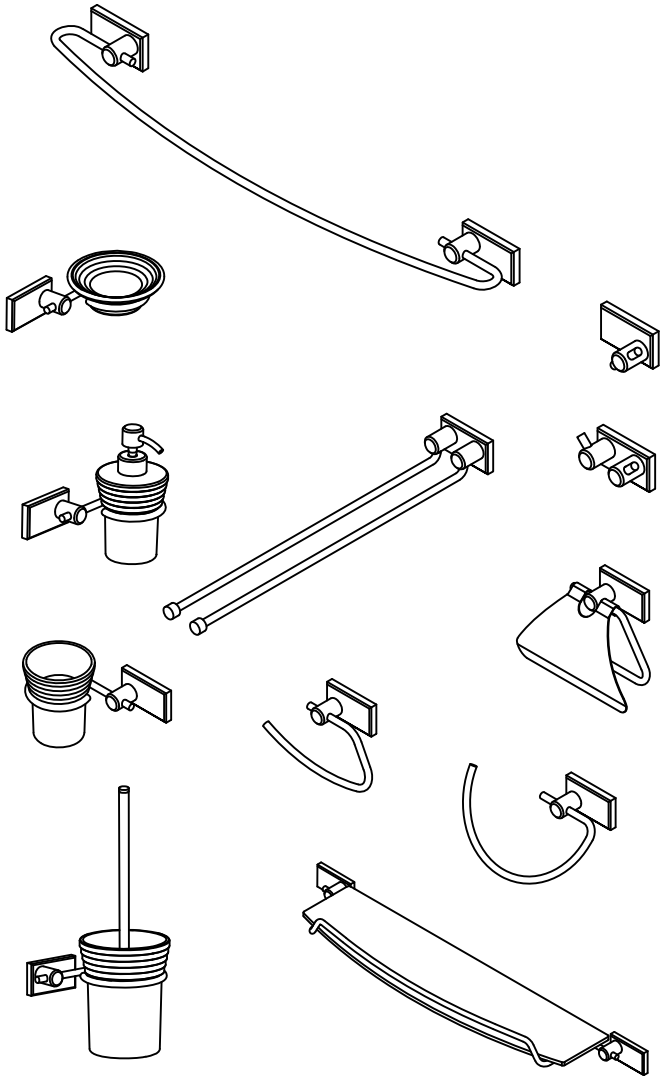
6891 SERIES: